TECHNICAL SUPPORT DOCUMENT

Air Discharge Permit 23-3585
Air Discharge Permit Application CL-3234

Issued: June 15, 2023

VAN MALL 76

SWCAA ID – 1431

Prepared By: Clint Lamoreaux
Air Quality Engineer
Southwest Clean Air Agency

TABLE OF CONTENTS

1. FACILITY IDENTIFICATION 1
2. FACILITY DESCRIPTION 1
3. CURRENT PERMITTING ACTION.....1
4. PROCESS DESCRIPTION 1
5. EQUIPMENT/ACTIVITY IDENTIFICATION 1
6. EMISSIONS DETERMINATION 2
7. REGULATIONS AND EMISSION STANDARDS 4
8. RACT/BACT/BART/LAER/PSD/CAM DETERMINATIONS.....7
9. AMBIENT IMPACT ANALYSIS 8
10. DISCUSSION OF APPROVAL CONDITIONS 8
11. START-UP AND SHUTDOWN/ALTERNATIVE OPERATING SCENARIOS/POLLUTION PREVENTION.....9
12. EMISSION MONITORING AND TESTING.....10
13. FACILITY HISTORY 10
14. PUBLIC INVOLVEMENT OPPORTUNITY 11

Appendix A – CARB Executive Order G-70-97-A

ABBREVIATIONS

List of Acronyms

ADP ..... Air Discharge Permit

AP-42 ..... Compilation of Emission Factors, AP-42, 5th Edition, Volume 1, Stationary Point and Area Sources – published by EPA

BACT..... Best available control technology

BART ..... Best Available Retrofit Technology

CARB ..... California Air Resources Board

CFR..... Code of Federal Regulations

EPA..... U.S. Environmental Protection Agency

EU ..... Emission Unit

EVR ..... Enhanced Vapor Recovery

LAER..... Lowest achievable emission rate

MACT..... Maximum Achievable Control Technologies

NESHAP..... National Emission Standards for Hazardous Air Pollutants

NSPS..... New Source Performance Standard

ORVR ..... Onboard Refueling Vapor Recovery

PSD ..... Prevention of Significant Deterioration

RACT..... Reasonably Available Control Technology

RCW ..... Revised Code of Washington

SEPA..... State Environmental Policy Act

Standard ..... Standard conditions at a temperature of 68°F (20°C) and a pressure of 29.92 in Hg (760 mm Hg)

SWCAA ..... Southwest Clean Air Agency

T-BACT ..... Best Available Control Technology for toxic air pollutants

WAC ..... Washington Administrative Code

List of Units and Measures

tpy ..... Tons per year

List of Chemical Symbols, Formulas, and Pollutants

CO ..... Carbon monoxide

CO_2 ..... Carbon dioxide

CO_2e ..... Carbon dioxide equivalent

HAP ..... Hazardous air pollutant listed pursuant to Section 112 of the Federal Clean Air Act

NO_X ..... Nitrogen oxides

O_2 ..... Oxygen

PM..... Particulate Matter with an aerodynamic diameter 100 µm or less

PM_{10} ..... PM with an aerodynamic diameter 10 µm or less

$PM_{2.5}$ ..... PM with an aerodynamic diameter 2.5 µm or less

SO_2 ..... Sulfur dioxide

SO_X ..... Sulfur oxides

TAP..... Toxic air pollutant pursuant to Chapter 173-460 WAC

VOC..... Volatile organic compound

Terms not otherwise defined have the meaning assigned to them in the referenced regulations or the dictionary definition, as appropriate.

1. FACILITY IDENTIFICATION

Applicant Name:	Vanmall 76, LLC
Applicant Address:	4905 NE 94th Ave. Vancouver, WA 98662
Facility Name:	Van Mall 76
Facility Address:	4905 NE 94th Ave. Vancouver, WA 98662
SWCAA Identification:	1431
Contact Person:	Amarveer Singh
Primary Process:	Gasoline dispensing
SIC/NAICS Code:	5541: Gasoline service stations 44711: Gas stations with convenience stores
Facility Classification:	Natural Minor

2. FACILITY DESCRIPTION

This facility is a retail gasoline dispensing facility associated with a convenience store.

3. CURRENT PERMITTING ACTION

This permitting action is in response to Air Discharge Permit (ADP) application number CL-3234 received May 9, 2023. ADP application CL-3234 requests approval to remove Stage II vapor recovery equipment at an existing gas station.

Air Discharge Permit 94-1597 will be superseded in this permitting action.

4. PROCESS DESCRIPTION

This facility receives unleaded gasoline from tanker trucks for storage in three underground storage tanks or tank compartments. The gasoline storage tanks are equipped with coaxial vapor balance systems that return gasoline vapors vented from the underground storage tanks to the tanker truck during filling (Stage I vapor recovery). Gasoline is dispensed from 8 pumps. Vapors displaced from individual motor vehicle gasoline tanks during filling will not be returned to the gasoline storage tanks (no Stage II vapor recovery).

Products at Pump	Number of Pumps
Blended gasoline through a single hose	8

5. EQUIPMENT/ACTIVITY IDENTIFICATION

5.a Storage Tanks. The following storage tanks are utilized at the facility:

Tank	Product	Capacity
1	Super Unleaded	10,000 gallons
2	Regular Unleaded	10,000 gallons
3	Regular Unleaded	10,000 gallons
4	Unused (previously contained diesel)	10,000 gallons

The underground gasoline storage tanks were equipped with two-point vapor recovery equipment approved by CARB Executive Order G-70-97-A "Stage I Vapor Recovery Systems for Underground Gasoline Storage Tanks at Service Stations" as components of the Stage I vapor recovery system.

This facility will not utilize Stage II vapor recovery equipment. The following low permeation hoses and enhanced conventional nozzles will be installed:

Component	Make / Model
Nozzles	OPW / 14E
Hoses and Whip Hoses	Goodyear / Low Permeation

5.b. Equipment/Activity Summary.

ID No.	Equipment/Activity	Control Equipment/Measure
1	Retail Gasoline Dispensing Facility	Stage I Vapor Recovery Systems

6. EMISSIONS DETERMINATION

Unless otherwise specified by SWCAA, actual emissions must be determined using the specified input parameter listed for each emission unit and the following hierarchy of methodologies:

(a) Continuous emissions monitoring system (CEMS) data;
(b) Source emissions test data (EPA reference method). When source emissions test data conflicts with CEMS data for the time period of a source test, source test data must be used;
(c) Source emissions test data (other test method); and
(d) Emission factors or methodology provided in this TSD.

6.a. Gasoline Vapors. Total potential VOC emissions from the facility were estimated using the following emission factors from the California Air Resources Board December 23, 2013 document "Revised Emission Factors for Gasoline Marketing Operations at California Gasoline Dispensing Facilities":

Emission Source	VOC Emission Factor (lb/1,000 gallons of fuel)
Loading – Stage I Controlled (non EVR)	0.380
Breathing – Controlled with P/V Valve	0.092
Uncontrolled Refueling – Stage II uncontrolled (non ORVR Vehicles, no Stage II)	0.84[1]
Controlled Refueling (ORVR vehicles, no Stage II)	0.151[2]
Spillage (ECO nozzles)	0.240
Hose Permeation (low permeation)	0.009
Total	**1.712**

[1] Based on 90% of the gasoline being dispensed to vehicles equipped with carbon canisters (ORVR). The base emission factor, assuming no ORVR vehicles, is 8.400 lb/1,000 gallons. 10% of the vehicles are not equipped with ORVR: 8.4 lb/1,000 gallons * (1-0.90) = 0.84 lb/1,000 gallons.
[2] This is the amount of vapor released during refueling that is attributable to those vehicles equipped with carbon canisters (ORVR) assuming carbon canisters provide for 98% control. 8.400 lb/1,000 gallons * 90% of gas dispensed to vehicles with ORVR * (2% of vapors not captured by the canister) = 0.151 lb/1,000 gallons.

The above calculations assume that 90% of the fuel is dispensed to vehicles equipped with onboard refueling vapor recovery (ORVR). SWCAA expects this level was met in Clark County in 2020 and will be met a few years later in Cowlitz, Lewis, Skamania, and Wahkiakum counties.

At a throughput of 5,000,000 gallons of gasoline per year, the facility would emit 4.28 tons of volatile organic compounds. Based on EPA Speciate 3.2 profile number 2455, approximately 50.0% of the total VOC emissions are toxic air pollutants (TAPs) as defined by WAC 173-460 (as in effect August 21, 1998), and approximately 12.9% of the total VOC emissions are federally listed hazardous air pollutants (HAPs). For a throughput of 5,000,000 gallons per year, TAP and HAP emission rates are estimated at 2.14 tons per year, and 0.55 tons per year respectively.

6.b. Emissions Summary

Air Pollutant	Potential to Emit (tpy)	Project Impact (tpy)
NO_X	0	0
CO	0	0
VOC	4.28	1.67[1]
SO_2	0	0
PM	0	0
PM_{10}	0	0
$PM_{2.5}$	0	0
CO_2/CO_2e	0	0
Toxic Air Pollutants	2.14	0.84[1]
Hazardous Air Pollutants	0.55	0.22[1]

[1] Based on 90% of fuel dispensed to ORVR-equipped vehicles, removal of Stage II vapor recovery at this facility, in combination with adding ECO nozzles and low permeation hoses. The magnitude of the project impact presented here assumes a gasoline throughput of 5,000,000 gallons per year.

7. REGULATIONS AND EMISSION STANDARDS

Regulations have been established for the control of emissions of air pollutants to the ambient air. Regulations applicable to the proposed facility that have been used to evaluate the acceptability of the proposed facility and establish emission limits and control requirements include, but are not limited to, the following regulations, codes, or requirements. These items establish maximum emissions limits that could be allowed and are not to be exceeded for new or existing facilities. More stringent limits are established in this ADP consistent with implementation of Best Available Control Technology (BACT):

7.a. Title 40 Code of Federal Regulations (CFR) Part 63.11110 et seq. Subpart CCCCCC "National Emission Standards for Hazardous Air Pollutants for Source Category: Gasoline Dispensing Facilities" establishes emission control, testing, recordkeeping and reporting requirements for new and existing gasoline dispensing facilities. Which requirements apply to a specific facility depend upon when the facility began operation and the monthly throughput. This facility began operation prior to January 10, 2008 and has a potential throughput of 100,000 gallons per month or more. Facilities with a throughput of 100,000 gallons per month or more that began operation prior to January 10, 2008 must be in compliance with a state rule or federally enforceable permit that contains requirements to achieve emission reductions of at least 90% by January 10, 2008 or comply with requirements found in Table 1 of Subpart CCCCCC including:

(1) All vapor connections and lines on the storage tank shall be equipped with closures that seal upon disconnection;

(2) The vapor line from the gasoline storage tank to the gasoline cargo tank shall be vapor tight;
(3) The vapor balance system shall be designed such that the pressure in the tank truck does not exceed 18" w.c. pressure or 5.9" w.c. vacuum during product transfer;
(4) The vapor recovery and product adaptors, and the method of connection with the delivery elbow, shall be designed so as to prevent the over-tightening or loosening of fittings during normal delivery operations;
(5) Liquid fill connections for all systems shall be equipped with vapor-tight caps;
(6) Pressure/vacuum vent valves shall be installed on the storage tank vent pipes. The positive pressure setting shall be 2.5" w.c. to 6" w.c. and the negative pressure setting shall be 6" w.c. to 10" w.c. The total leak rate for all pressure/vacuum valves at an affected facility, including connections, shall not exceed 0.17 cubic foot per hour at a pressure of 2.0" w.c. and 0.63 cubic foot per hour at a vacuum of 4" w.c.;
(7) The vapor balance system shall be capable of meeting the static pressure performance requirement found in Table 1 of Subpart CCCCCC; and
(8) Each new or existing gasoline storage tank shall be equipped with a dual-point vapor balance system.

As of January 10, 2008 this facility was complying with the requirements of SWCAA 491 which required Stage I vapor recovery equipment as approved by CARB or SWCAA. The Stage I vapor recovery equipment provided at least 90% control of gasoline vapors; therefore, this facility is not subject to the requirements of Table 1 or any other requirement of this rule including initial notification. Note that although the rule adds no requirements for this facility, this facility is an affected source for the purposes of this rule.

7.b. Title 40 CFR Part 80 "Regulation of Fuels and Fuel Additives" in section 80.22(j) requires that after January 1, 1998, every retailer and wholesale purchaser-consumer of gasoline and methanol shall limit each nozzle from which gasoline or methanol is introduced into motor vehicles to a maximum fuel flow rate not to exceed 10 gallons per minute.

7.c. Revised Code of Washington (RCW) 70A.15.2040 empowers any activated air pollution control authority to prepare and develop a comprehensive plan or plans for the prevention, abatement and control of air pollution within its jurisdiction. An air pollution control authority may issue such orders as may be necessary to effectuate the purposes of the Washington Clean Air Act (RCW 70A.15) and enforce the same by all appropriate administrative and judicial proceedings subject to the rights of appeal as provided in Chapter 62, Laws of 1970 Ex. Sess.

7.d. RCW 70A.15.2210 provides for the inclusion of conditions of operation as are reasonably necessary to assure the maintenance of compliance with the applicable ordinances, resolutions, rules and regulations when issuing an ADP for installation and establishment of an air contaminant source.

7.e. Washington Administrative Code (WAC) 173-460 "Controls for New Sources of Toxic Air Pollutants" requires Best Available Control Technology for toxic air pollutants (T-BACT), identification and quantification of emissions of toxic air pollutants and demonstration of

protection of human health and safety from new sources not provided an exemption under WAC 173-460-030. Gasoline dispensing facilities are exempt from the provisions of WAC 173-460.

7.f. WAC 173-476 "Ambient Air Quality Standards" establishes ambient air quality standards for PM_{10}, $PM_{2.5}$, lead, SO_2, NO_X, ozone, and CO in the ambient air, which must not be exceeded.

7.g. SWCAA 400-040 "General Standards for Maximum Emissions" requires all new and existing sources and emission units to meet certain performance standards with respect to Reasonably Available Control Technology (RACT), visible emissions, fallout, fugitive emissions, odors, emissions detrimental to persons or property, SO_2, concealment and masking, and fugitive dust.

7.h. SWCAA 400-040(3) "Fugitive Emissions" requires that reasonable precautions be taken to prevent the fugitive release of air contaminants to the atmosphere.

7.i. SWCAA 400-040(4) "Odors" requires any source which generates odors that may unreasonably interfere with any other property owner's use and enjoyment of their property to use recognized good practice and procedures to reduce these odors to a reasonable minimum.

7.j. SWCAA 400-109 "Air Discharge Permit Applications" requires that an ADP application be submitted for all new installations, modifications, changes, or alterations to process and emission control equipment consistent with the definition of "new source." Sources wishing to modify existing permit terms may submit an ADP application to request such changes. An ADP must be issued, or written confirmation of exempt status must be received, before beginning any actual construction, or implementing any other modification, change, or alteration of existing equipment, processes, or permits.

7.k. SWCAA 400-110 "New Source Review" requires that SWCAA issue an ADP in response to an ADP application prior to establishment of the new source, emission unit, or modification.

7.l. SWCAA 400-111 "Requirements for Sources in a Maintenance Plan Area" requires that no approval to construct or alter an air contaminant source will be granted unless it is evidenced that:

(1) The equipment or technology is designed and will be installed to operate without causing a violation of the applicable emission standards;
(2) Emissions will be minimized to the extent that the new source will not exceed emission levels or other requirements provided in the maintenance plan;
(3) BACT will be employed for all air contaminants to be emitted by the proposed equipment;
(4) The proposed equipment will not cause any ambient air quality standard to be exceeded; and

(5) If the proposed equipment or facility will emit any toxic air pollutant regulated under WAC 173-460, the proposed equipment and control measures will meet all the requirements of that Chapter.

The facility is located in a maintenance plan area; therefore, this regulation applies to the facility.

7.m. SWCAA 491-040(4) "Gasoline Vapor Control Requirements – Gasoline Dispensing Facilities" establishes the following requirements:

(1) All gasoline dispensing facilities with an annual gasoline throughput greater than two hundred thousand (200,000) gallons in Clark County and three hundred sixty thousand (360,000) gallons in Cowlitz, Lewis, Skamania and Wahkiakum Counties shall be subject to gasoline Stage I vapor control requirements;
(2) All gasoline dispensing stations subject to this section shall be equipped with submerged or bottom fill lines and fittings to balance gasoline vapors with the delivery transport tank;
(3) The owner or operator of a gasoline dispensing facility subject to this section shall not permit the loading of gasoline into a storage tank equipped with vapor recovery equipment from a transport tank equipped with vapor recovery fittings unless Stage I vapor recovery equipment is attached to the transport tank and operated satisfactorily;
(4) Every retailer and wholesale purchaser-consumer shall equip each pump from which gasoline is dispensed into motor vehicles with a nozzle that dispense fuel at a flow rate not to exceed 10 gallons per minute;
(5) Stage II vapor recovery equipment compatible with ORVR may be removed from service beginning January 1, 2023 after an Air Discharge Permit has been issued for the modification; and
(6) New gasoline dispensing facilities (built after February 7, 2020), or existing gasoline dispensing facilities without Stage II vapor recovery, are not required to install Stage II vapor recovery equipment.

8. RACT/BACT/BART/LAER/PSD/CAM DETERMINATIONS

The proposed equipment and control systems incorporate BACT for the types and amounts of air contaminants emitted by the processes as described below:

8.a. Retail Gasoline Dispensing Facility. SWCAA has determined that Best Available Control Technology for the control of gasoline vapors emitted from new gasoline dispensing facilities with a throughput of more than 200,000 gallons per year in Clark County consists of EVR Stage I vapor recovery equipment as tested and approved by CARB, enhanced conventional nozzles (where Stage II is not in place), and low permeation hoses if liquid gasoline is carried against the outermost hose wall.

The underground storage tanks at this facility are not new. The existing Stage I vapor recovery system in use by this facility for the underground storage tanks was approved by

CARB Executive Order G-70-97-A dated December 9, 1985 and is not EVR certified. Because the Stage I system is not new, it is not being reviewed against BACT requirements.

This facility will utilize enhanced conventional nozzles and low permeation hoses. This configuration meets the requirements of BACT for this facility.

8.b. PSD Applicability. Maximum potential emissions from this facility are well below PSD thresholds; therefore, PSD permitting is not required.

8.c. Compliance Assurance Monitoring (CAM) Applicability Determination. CAM is not applicable to any emission unit at this source because it is not a major source and is not required to obtain a Part 70 permit.

9. AMBIENT IMPACT ANALYSIS

9.a. The retail gasoline dispensing facility equipped with Stage I vapor recovery systems, ECO nozzles, and low permeation hoses will not cause the ambient air quality standards established by Title 40 Code of Federal Regulations Part 50 (40 CFR 50), "National Primary and Secondary Ambient Air Quality Standards" to be violated.

9.b. The retail gasoline dispensing facility equipped with Stage I vapor recovery systems, ECO nozzles, and low permeation hoses, if properly installed and maintained, can be operated without causing a violation of the applicable emission standards which include the limits established under SWCAA 400-040 "General Standards for Maximum Emissions."

9.c. The retail gasoline dispensing facility equipped with Stage I vapor recovery systems, ECO nozzles, and low permeation hoses will not cause the requirements of WAC 173-460 "Controls for New Sources of Toxic Air Pollutants," or WAC 173-476 "Ambient Air Quality Standards" to be violated.

10. DISCUSSION OF APPROVAL CONDITIONS

SWCAA has made a determination to issue ADP 23-3585 in response to ADP application CL-3234. ADP 23-3585 contains approval requirements deemed necessary to assure compliance with applicable regulations and emission standards, as discussed below.

10.a. Supersession of Previous Permits. ADP 94-1597 will be superseded in its entirety.

10.b. Emission Limits. An annual VOC emission limit of 4.28 tons per year was established. This limit is based upon the facility utilizing properly operated Stage I vapor recovery systems, enhanced conventional nozzles, low permeation hoses, dispensing 90% of the fuel to ORVR-equipped vehicles, and a gasoline throughput of 5,000,000 gallons per year.

10.c. Operational Limits and Requirements. Consistent with SWCAA 400-040(4), the permittee is required to use recognized good practice and procedures to minimize odors that impact other property owners.

The gasoline throughput was limited to 5,000,000 gallons per year. At higher throughputs the facility would be required to increase the frequency of vapor recovery testing.

The remaining requirements are related to proper operation of the Stage I vapor recovery systems, the use of low permeation hoses and enhanced conventional nozzles.

10.d. Monitoring and Recordkeeping Requirements. The permittee is required to record each occurrence of maintenance and repairs to vapor recovery equipment so that SWCAA and the permittee can assure that maintenance and repairs are consistent with approved vapor recovery requirements.

10.e. Reporting Requirements. Total gasoline throughput and the annual emissions inventory are required to be submitted to SWCAA by January 31st of each year (unless otherwise directed by SWCAA) to demonstrate compliance with the throughput limitation in the permit and allow for the development of a comprehensive emissions inventory. Test results must be reported to SWCAA within 14 days of test completion consistent with CARB and SWCAA reporting requirements.

11. START-UP AND SHUTDOWN/ALTERNATIVE OPERATING SCENARIOS/POLLUTION PREVENTION

11.a. Start-up and Shutdown Provisions. Pursuant to SWCAA 400-081 "Start-up and Shutdown," technology-based emission standards and control technology determinations shall take into consideration the physical and operational ability of a source to comply with the applicable standards during start-up or shutdown. Where it is determined that a source is not capable of achieving continuous compliance with an emission standard during start-up or shutdown, SWCAA shall include appropriate emission limitations, operating parameters, or other criteria to regulate performance of the source during start-up or shutdown.

This source is capable of achieving continuous compliance with all applicable requirements; therefore, no start-up or shutdown provisions were included in the ADP.

11.b. Alternate Operating Scenarios. SWCAA conducted a review of alternate operating scenarios applicable to equipment affected by this permitting action. The permittee did not propose or identify any applicable alternate operating scenarios. Therefore, none were accommodated by the approval conditions.

11.c. Pollution Prevention Measures. SWCAA conducted a review for possible pollution prevention measures outside of the use of Stage I vapor recovery equipment, low permeation hoses, and enhanced conventional nozzles. As indicated in Section 8, Stage II

vapor recovery equipment was not necessary to meet the requirements of BACT. No other pollution prevention measures were identified by either the permittee or SWCAA. Therefore, none were accommodated in the approval conditions.

12. EMISSION MONITORING AND TESTING

In accordance with the requirements of SWCAA 491-040(4)(n) that became effective February 7, 2020, testing of each pressure-vacuum vent valve is required every 36 months and Stage I vapor recovery testing is required annually. The pressure-vacuum vent valve testing frequency is consistent with the testing required by 40 CFR 63 Subpart CCCCCC. New pressure/vacuum vent valves are typically tested at the factory, therefore initial testing does not apply to new valves with a factory test. In accordance with SWCAA 491, initial vapor recovery testing is required prior to placing the equipment back into service rather than within 60 days after startup as specified in the applicable CARB Executive Order.

For the static pressure decay test, CARB Test Procedure 201.3 does not provide an allowable final pressure for stations without Stage II vapor recovery. Therefore, the allowable final pressure equation from 40 CFR 63 Subpart CCCCCC was included in the permit.

13. FACILITY HISTORY

13.a. Previous Permitting Actions. The following approvals, Permits, and Orders have been issued for this facility:

Permit / Order #	Application #	Date Issued	Description
94-1597	CL-913	5/3/1994	Approval to install coaxial Stage I and balance-style Stage II vapor recovery equipment at an existing unpermitted gas station.

Bold font indicates that the Air Discharge Permit was superseded or no longer in effect upon issuance of Air Discharge Permit 23-3585.

13.b. Compliance History. A search of source records on file at SWCAA identified the following compliance issues as the facility in the past five years. Some of these compliance issues are unresolved.

NOV	Date	Violation
10811	5/16/2023	Failure to report 2022 annual emission inventory by 1/31/2023. This NOV is unresolved.
10714	8/18/2022	Failure to comply with Notice of Correction (NOC) 10701. A penalty of $600 was assessed and has not been paid. The penalty amount has been sent to collections.
10726	7/26/2022	Failure to pay 2021/2022 registration fees. A penalty of $1,337.55 was assessed and has not been paid. The penalty amount has been sent to collections.
10705	5/18/2022	Failure to comply with NOV 10552. A penalty of $2,031.25 was assessed and has not been paid. The penalty amount has been sent to collections.
10701	5/11/2022	Failure to report 2021 annual emission inventory by 1/31/2022. A penalty of $600 was assessed and has not been paid. The penalty amount has been sent to collections.
10552	9/16/2021	Faily to comply with NOC 10341. A penalty of $975 was assessed and has not been paid. The penalty amount has been sent to collections.
10346	5/6/2021	Failure to report 2020 annual emission inventory by 1/31/2021. A penalty of $600 was assessed.
10341	5/4/2021	Failure to remove defective Stage I equipment from service.
6601	10066	Failure to pay 2018/2019 registration fees. A penalty was not assessed.
10066	5/13/2019	Failure to report 2018 annual emission inventory by 1/31/2019. A penalty of $1,200 was assessed.

14. PUBLIC INVOLVEMENT OPPORTUNITY

14.a. Public Notice for ADP Application CL-3234. Public notice for ADP application CL-3234 was published on the SWCAA website for a minimum of 15 days, beginning on May 9, 2023.

14.b. Public/Applicant Comment for ADP Application CL-3234. SWCAA did not receive specific comments, a comment period request, or any other inquiry from the public or the applicant regarding ADP application CL-3234. Therefore, no public comment period was provided for this permitting action.

14.c. State Environmental Policy Act. This project is exempt from SEPA requirements pursuant to WAC 197-11-800(3) since it only involves repair, remodeling, maintenance, or minor alteration of existing structures, equipment or facilities, and does not involve material expansions or changes in use. SWCAA issued a determination that the project is exempt from SEPA review on June 15, 2023 (Determination of SEPA Exempt - SWCAA 23-024).

Appendix A

CARB Executive Order G-70-97-A

Stage I Vapor Recovery Systems for Underground Gasoline Storage Tanks at Service Stations

State of California
AIR RESOURCES BOARD

Executive Order G-70-97-A

Stage I Vapor Recovery Systems for Underground
Gasoline Storage Tanks at Service Stations

WHEREAS, the Air Resources Board (the "Board") has established, pursuant to Sections 39600, 39601, and 41954 of the Health and Safety Code, certification procedures for systems designed for the control of gasoline vapor emissions during filling of underground gasoline storage tanks ("Stage I vapor recovery systems") in its "Certification Procedures for Gasoline Vapor Recovery Systems at Service Stations" as last amended December 4, 1981 (the "Certification Procedures"), incorporated by reference in Section 94001 of Title 17, California Administrative Code;

WHEREAS, the Board has established, pursuant to Sections 39600, 39601, and 41954 of the Health and Safety Code, test procedures for determining compliance of Stage I vapor recovery systems with emission standards in its "Test Procedures for Determining the Efficiency of Gasoline Vapor Recovery Systems at Services Stations" as last amended September 1, 1982 (the "Test Procedures"), incorporated by reference in Section 94000 of Title 17, California Administrative Code;

WHEREAS, the Board finds it beneficial to consolidate Executive Orders G-70-47-B, G-70-4-A, and G-70-2-G, certifying Stage I vapor recovery systems in order to have a complete listing by manufacturer of all Stage I vapor control equipment which has been certified and is available for use in the coaxial and/or two point Stage I vapor recovery systems;

WHEREAS, the Board finds it necessary to revise Executive Order G-70-97 to clarify the requirement for pressure/vacuum relief valves on the vents of underground storage tanks and to clarify the interchangeability of certain Stage I vapor recovery system componets.

NOW THEREFORE, IT IS HEREBY ORDERED that Executive Order G-70-97 issued on May 13, 1985 for Stage I vapor recovery systems for underground gasoline storage tanks be modified by this Executive Order G-70-97-A.

IT IS FURTHER ORDERED that Stage I Systems will conform to one of the four options shown in Figures 1 thru 4 of this Executive Order and only certified vapor recovery components (or fittings) may be used in the systems. Exhibits 1 thru 3 (Attached) list by manufacturer all of the certified fittings approved for use with Stage I vapor recovery systems. The systems shall otherwise comply with all the certification requirements in the latest "Certification Procedures for Gasoline Vapor Recovery Systems at Service Stations" applicable to Stage I systems.

IT IS FURTHER ORDERED that any underground storage tank equipped with a Stage I vapor recovery system and filled from a gasoline delivery tank equipped with pressure-differential activated vapor-return vent valves must have a pressure-vacuum relief valve on the vent of the underground storage tank.

IT IS HEREBY ORDERED that compliance with the applicable certification requirements and rules and regulations of the Division of Measurement Standards, the Office of the State Fire Marshal, and the Division of Occupational Safety and Health of the Department of Industrial Relations is made a condition of this certification.

IT IS FURTHER ORDERED that the components and alternative configurations certified hereby shall perform in actual use with the same effectiveness as the certification test system.

IT IS FURTHER ORDERED that any alteration of the equipment, parts, design, or operation of the configurations certified hereby, is prohibited, and deemed inconsistent with this certification, unless such alteration has been approved by the undersigned or the Executive Officer's designee.

Executed at Sacramento, California this 9th day of December 1985.

for James D. Boyd
Executive Officer

FIGURE 1

Two Point Stage 1 Vapor Recovery System
Without Overfill Protection

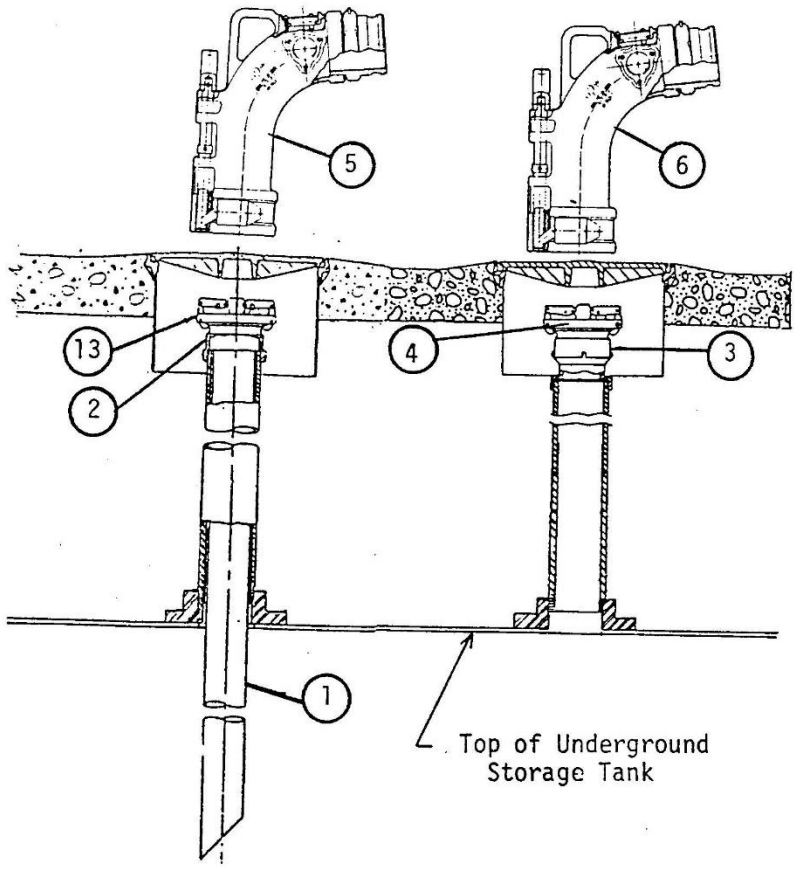

LEGEND

1 Fill Tube
2 Fill Adapter
3 Vapor Adapter
4 Vapor Cap
5 Product Elbow
6 Vapor Elbow
13 Fill Cap

FIGURE 2

Coaxial Stage 1 Vapor Recovery System
Without Overfill Protection

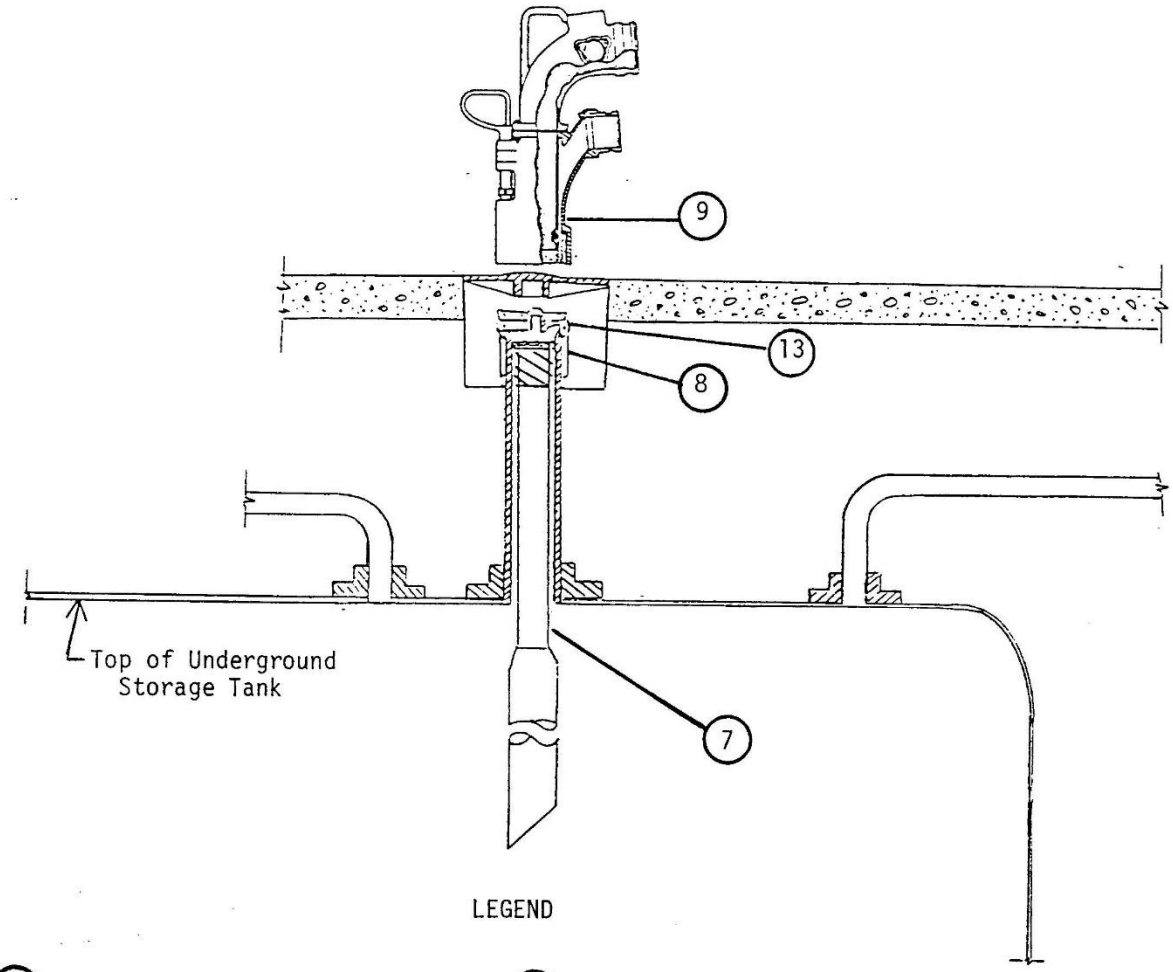

LEGEND

7	Coaxial Poppeted Fill Tube	9	Coaxial Elbow
8	Coaxial Fill Adapter	13	Fill Cap

FIGURE 3

Two Point Stage I Vapor Recovery System With Overfill Protection

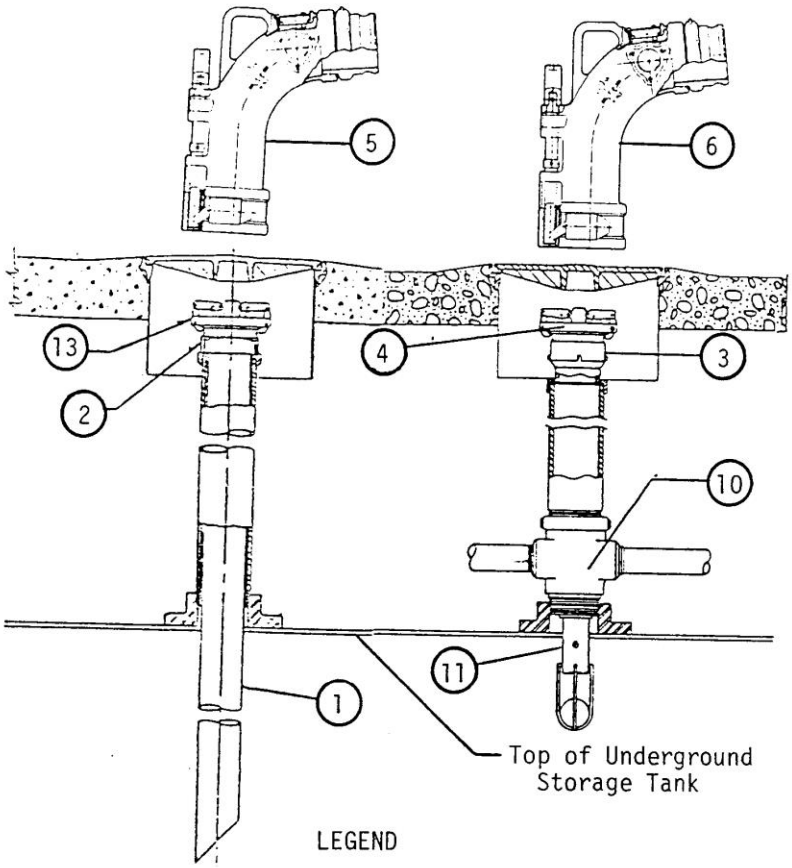

LEGEND

1. Fill Tube
2. Fill Adapter
3. Vapor Adapter
4. Vapor Cap
5. Fill Elbow
6. Vapor Elbow
10. Extractor Assembly
11. Float Vent Valve
13. Fill Cap

WARNING:

1. This system is not approved for use at service stations equipped with Red Jacket or Healy Phase II vapor recovery systems.

2. Float valve overfill protection systems should only be used on submerged pumping systems not with suction pump systems.

3. Overfill protection systems should only be used on gravity drop systems. Do not use where pump off unloading is used.

FIGURE 4

Coaxial Stage 1 Vapor Recovery System
With Overfill Protection

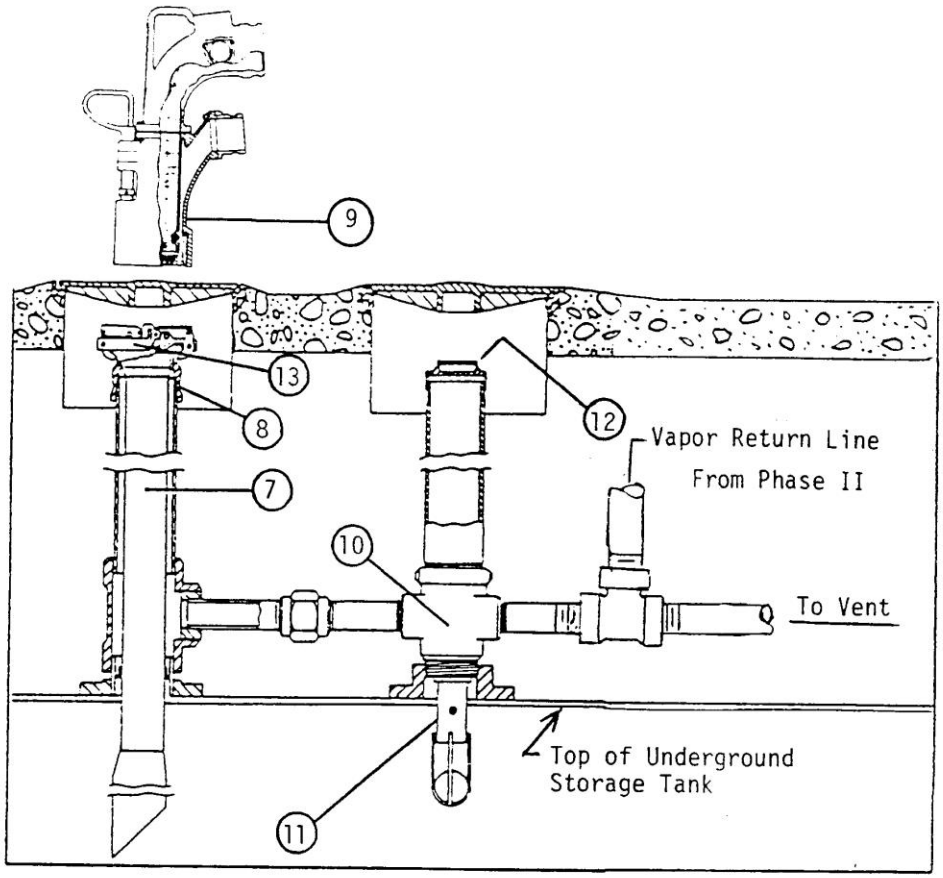

LEGEND

7	Coaxial Poppeted Fill Tube	10	Extractor Assembly
8	Coaxial Fill Adapter	11	Float Vent Valve
9	Coaxial Elbow	12	Pipe Cap[1/]
		13	Fill Cap

WARNING:

1. This system is not approved for use at service stations equipped with Red Jacket or Healy Phase II vapor recovery systems.
2. Float valve overfill protection systems should only be used as submerged pumping systems, not with suction pump systems.
3. Overfill protection systems should only be used on gravity drop systems. Do not use where pump off unloading is used.

1/ Required when a two point system is modified to a coaxial system.

EXHIBIT 1

Fittings Approved For Use On The Two Point Stage I Vapor Recovery Systems

	Fittings Required For All Two Point Stage I Vapor Recovery Systems For Locations see Figure 1						Additional Fittings Required For Two Point Vapor Recovery Systems With Stage I Overfill Protection. For Locations See Figure 3		
Legend No.	1	2	3	4	5	6	10 + 11	10	11
Manufacturer	Fill Tube	Fill Adapter	Vapor Adapter	Vapor Cap	Elbows Fill	Elbows Vapor	Extractor Assembly With Float Vent Valve	Extractor	Float Vent Valve
OPW	61 T	61 AS 633 T	1611 AV	1711 T 1711 TK	60 AS 60 T 60 TT	1711VT 1711VP	233 - MSD 233 - VTS 233 - SD	233 - VM 233 - V 233 - V	53 - VM 53 - VTS 53 - VM
Universal	723	724 727	0611 V	0612 VC 0613 VC 0614 VC		0711 V	V 420		37
EBW	782	776 778	300	304					
McDonald	245	268 A 267 A							
CNI		613 615	611 DB	611 VR			119		
Emco-Wheaton	A 20	A 30	A 76	A 99	F523	F 77	A79 Series	562291 562016 or	A-75
Andrews 1/	TF	54 AG		400 DC-L	56 TFR				
Evertite		97 A			99 C				
York-Serv, Inc.		101 102							

1/ Now owned by Dixon Valve & Coupling Company.

EXHIBIT 2

Fittings Approved For Use On The Coaxial Stage I Vapor Recovery System

Fillings Required For All Coaxial Stage I Vapor Recovery Systems			Additional Fittings Required For Coaxial Stage I Vapor Recovery Systems with Overfill Protection		
Legend No.	7 + 8	9	10 + 11	10	11
Manufacturer	Coaxial Poppeted Fill Tube Assembly with Adapter	Coaxial Elbow	Extractor Assembly With Float Vent Valve	Extractor Assembly	Float Vent Valve
OPW	68-TCP	60 TC 60 TTC	233-MSD 233-VTS	233-VM	53-VM 53-VTS
Emco Wheaton	4" Tube A88-001 3" Tube A88-003	F 298	A79-002 A79-003 A79-004	562290 or 562016	A 75
EBW	783-215				
Universal Valve Co.			V-420		37
CNI			119		

EXHIBIT 3

Fittings Approved For All Stage I Vapor Recovery Systems

Legend No.	(12)	(13)		
Manufacturer	Pipe Cap 1/	Fill Caps		Pressure Vacuum Relief Valve
		Top Seal	Side Seal	
OPW	116	634 TT	62 62 TT	95 UTE
Universal		731 733	727 732 734	
EBW		777	775	
McDonald		268 C	267 C	
CNI		64	32 33	
Emco Wheaton	A584	A 39 A 97		
Andrews 2/		400 FPC 54 LC		
Varec				2010-811
Hazlett				H-PVB-1

1/ Required when a Two Point System is converted to a Coaxial System with overfill protection.

2/ Now owned by Dixon Valve & Coupling Company.